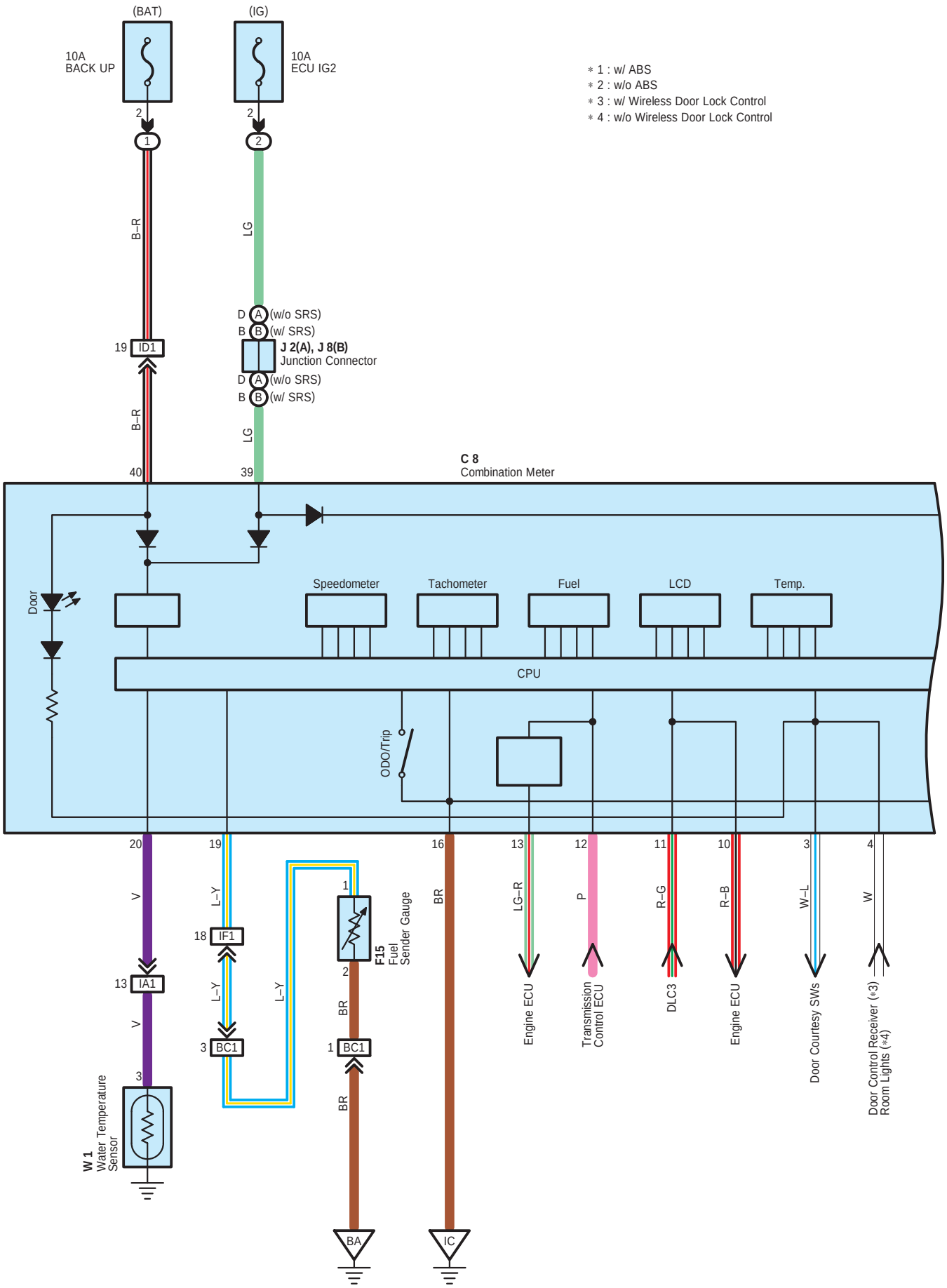
(BAT)
(IG)
10A
BACK UP
10A
ECU IG2
∗ 1 : w/ ABS
∗ 2 : w/o ABS
∗ 3 : w/ Wireless Door Lock Control
∗ 4 : w/o Wireless Door Lock Control
B–R
LG
D (w/o SRS)
B (w/ SRS)
J 2(A), J 8(B)
Junction Connector
ID1
C 8
Combination Meter
Door
Speedometer
Tachometer
Fuel
LCD
Temp.
CPU
ODO/Trip
IF1
IA1
BC1
F15
Fuel
Sender Gauge
W 1
Water Temperature
Sensor
L–Y
V
BR
LG–R
P
R–G
R–B
W–L
W
Engine ECU
Transmission
Control ECU
DLC3
Door Courtesy SWs
Door Control Receiver (∗3)
Room Lights (∗4)
BA
IC

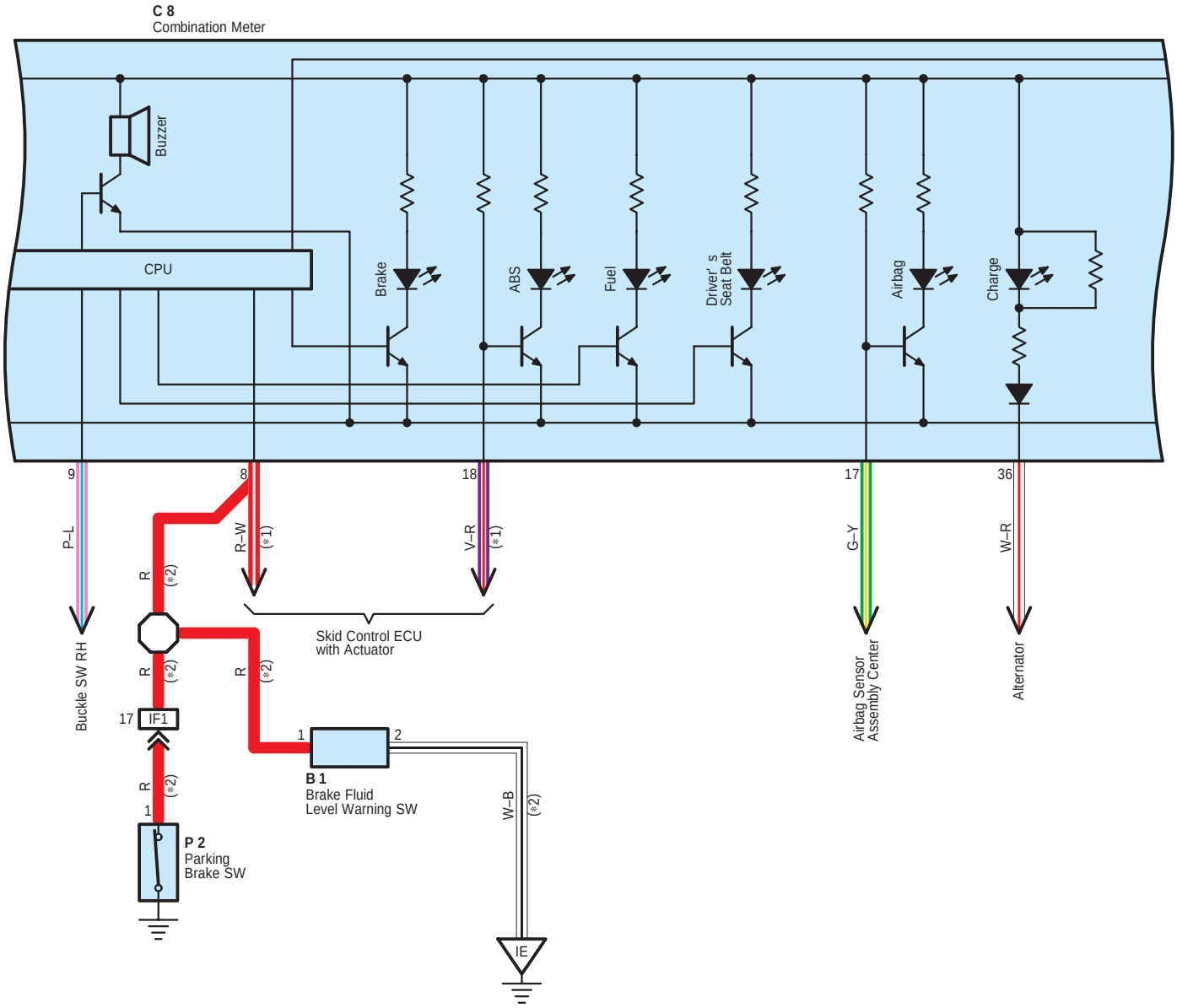
C 8
Combination Meter
Buzzer
CPU
Brake
ABS
Fuel
Driver' s
Seat Belt
Airbag
Charge
9
8
18
17
36
P–L
R–W
(*1)
V–R
(*1)
G–Y
W–R
R
(*2)
Skid Control ECU
with Actuator
Buckle SW RH
Airbag Sensor
Assembly Center
Alternator
17
IF1
1
2
B 1
Brake Fluid
Level Warning SW
W–B
P 2
Parking
Brake SW
IE

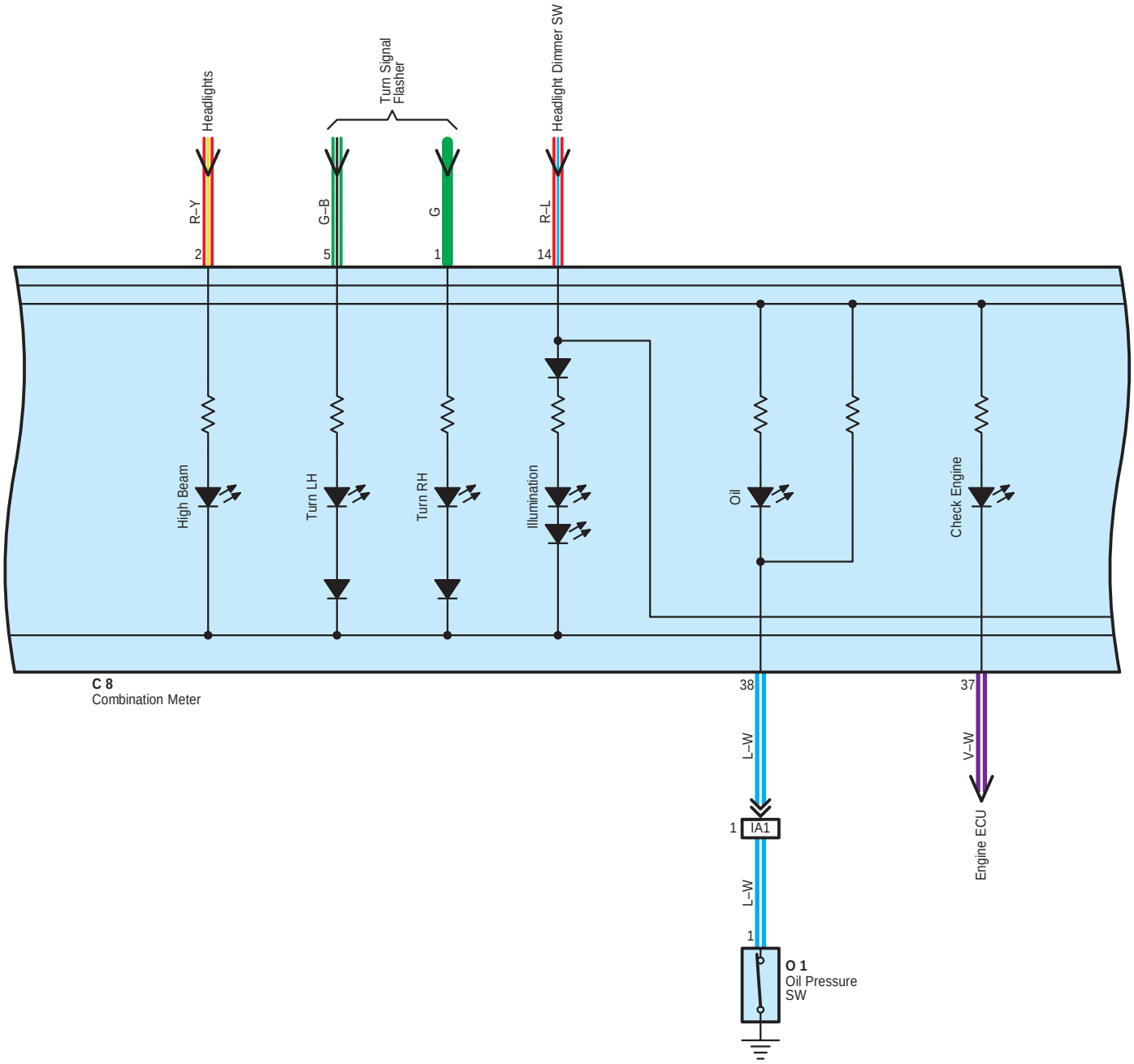
Headlights
Turn Signal Flasher
Headlight Dimmer SW
R–Y
G–B
G
R–L
2
5
1
14
High Beam
Turn LH
Turn RH
Illumination
Oil
Check Engine
C 8
Combination Meter
38
37
L–W
V–W
1
IA1
L–W
1
O 1
Oil Pressure SW
Engine ECU

∗ 5 : Mexico
∗ 6 : Except Mexico

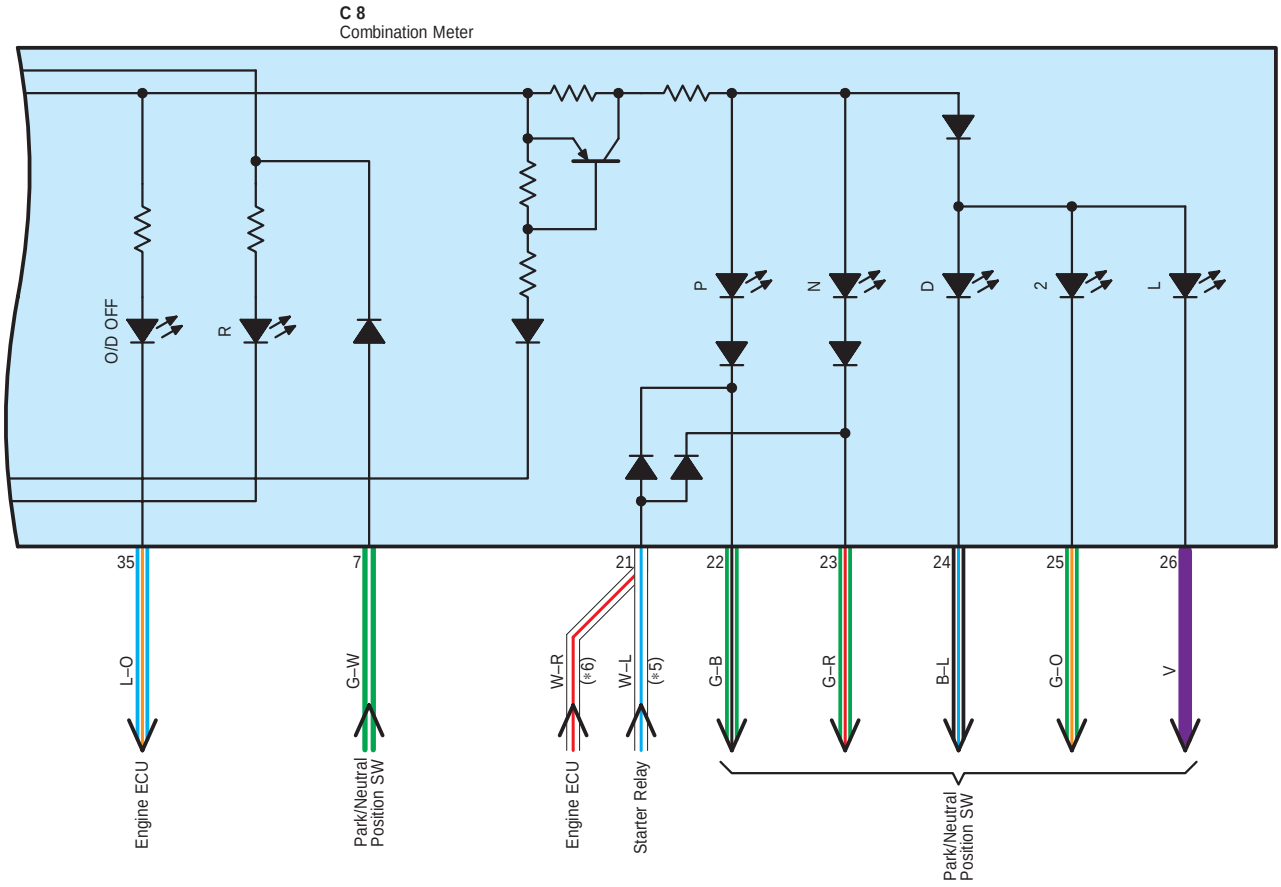

Combination Meter (A/T)

: Parts Location

Code	See Page	Code		See Page	Code	See Page
B1	24 (*1)	F15		40 (RHD)	O1	33 (*3)
C8	28 (LHD)	J2	A	39 (*6)	P2	31 (LHD)
	38 (*6)	J8	B	29 (LHD)	W1	25 (*1)
F15	30 (LHD)	O1		25 (*1)		33 (*3)

: Relay Blocks

Code	See Page	Relay Blocks (Relay Block Location)
1	22	Engine Room R/B (Engine Compartment Right)
2	23 (LHD)	Fuse Block (Left Kick Panel)
	23 (RHD)	Fuse Block (Right Kick Panel)

: Connector Joining Wire Harness and Wire Harness

Code	See Page	Joining Wire Harness and Wire Harness (Connector Location)
IA1	44 (LHD)	Engine Wire and Instrument Panel Wire (Right Kick Panel)
	49 (*6)	Engine Wire and Instrument Panel Wire (Left Kick Panel)
ID1	44 (LHD)	Engine Room Main Wire and Instrument Panel Wire (Right Kick Panel)
	49 (*6)	Engine Room Main Wire and Instrument Panel Wire (Cowl Side Panel RH)
IF1	44 (LHD)	Instrument Panel Wire and Floor Wire (Left Kick Panel)
	49 (*6)	Instrument Panel Wire and Floor Wire (Right Kick Panel)
BC1	45 (LHD)	Fuel Pump Wire and Floor Wire (Near the Fuel Tank)
	50 (RHD)	

: Ground Points

Code	See Page	Ground Points Location
IC	44 (LHD)	Cowl Side Panel LH
	49 (*6)	Right Kick Panel
IE	44 (LHD)	Cowl Side Panel LH
BA	45 (LHD)	Rear Quarter Panel RH
	50 (RHD)	

* 1 : LHD 3SZ–VE * 2 : LHD K3–VE * 3 : RHD 3SZ–VE * 4 : RHD K3–VE * 5 : RHD w/ Heater * 6 : RHD w/o Heater